Kalman Filter Equations and Models

Robert S. Huston
Pinpoint Dynamics, LLC

April 25, 2026

1. Linear System with Linear Measurements - Kalman Filter Estimation 3
2. Linear System with Nonlinear Measurements - Extended Kalman Filter Estimation 6
3. Nonlinear System with Nonlinear Measurements - Extended Kalman Filter Estimation 7
4. Linear System with Nonlinear Measurements - Unscented Kalman Filter Estimation 8
5. Constant Velocity Motion 10
6. Constant Turn Motion 12
7. Computed Cartesian Measurements 21
8. Polar Measurements 23
9. Polar Measurements with Direction Cosines 24
10. Polar Measurements with Range Rate 26
11. Polar Measurements with Range Rate and Direction Cosines 28
12. Target Maneuvering Index 30

1. Linear System with Linear Measurements - Kalman Filter Estimation

$$\mathbf{x}_{k+1} = \mathbf{\Phi}_{k+1|k}\mathbf{x}_k + \mathbf{u}_k + \mathbf{w}_k$$
$$\mathbf{z}_k = \mathbf{H}_k\mathbf{x}_k + \mathbf{v}_k$$

where $\mathbf{u}_k$ is a control input, and both $\mathbf{w}_k$ and $\mathbf{v}_k$ are white noise sequences

$$\mathbf{w}_k \sim \mathcal{N}(\mathbf{0}, \mathbf{Q}_k)\ ,\ \ \mathbf{Q}_k = E[\mathbf{w}_k\mathbf{w}_k^T]$$
$$\mathbf{v}_k \sim \mathcal{N}(\mathbf{0}, \mathbf{R}_k)\ ,\ \ \mathbf{R}_k = E[\mathbf{v}_k\mathbf{v}_k^T]$$

A flow diagram of the system model is shown below:

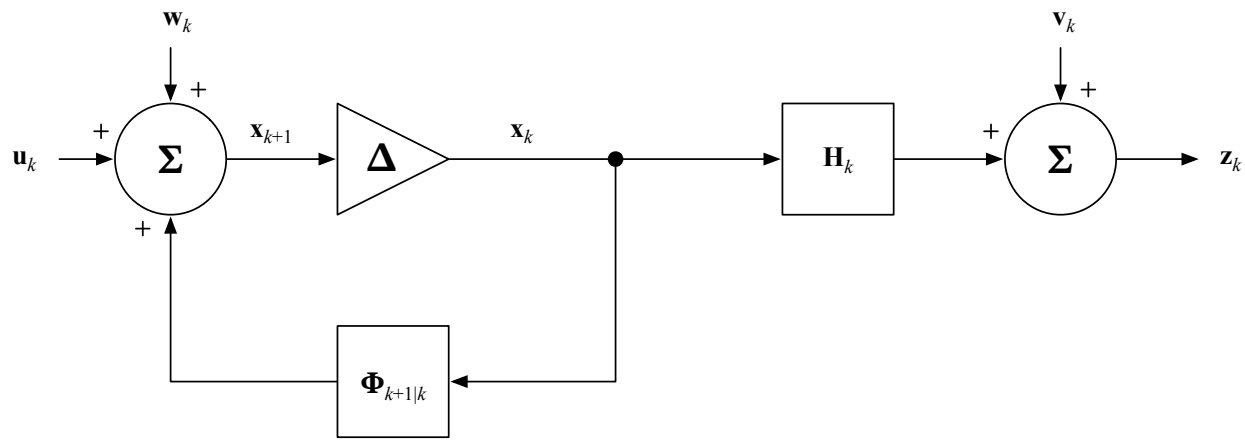

Kalman Filter

The Kalman Filter maintains an estimated state $\hat{\mathbf{x}}_k$ and an estimated state error covariance $\mathbf{P}_k$:

$$\hat{\mathbf{x}}_k = E\{\mathbf{x}_k\}$$
$$\mathbf{P}_k = E\{[\mathbf{x}_k - \hat{\mathbf{x}}_k]\,[\mathbf{x}_k - \hat{\mathbf{x}}_k]^T\}$$

Note that, since $\mathbf{P}_k$ is a square covariance matrix,

$$\mathbf{P}_k^T = \mathbf{P}_k$$

Prediction:

$$\hat{\mathbf{x}}_{k|k-1} = \mathbf{\Phi}_{k|k-1}\hat{\mathbf{x}}_{k-1|k-1} + \mathbf{u}_k$$
$$\mathbf{P}_{k|k-1} = \mathbf{\Phi}_{k|k-1}\,\mathbf{P}_{k-1|k-1}\,\mathbf{\Phi}_{k|k-1}^T + \mathbf{Q}_k$$

Correction:

$$\hat{\mathbf{z}}_k = \mathbf{H}_k \hat{\mathbf{x}}_{k|k-1}$$
$$\tilde{\mathbf{z}}_k = \mathbf{z}_k - \hat{\mathbf{z}}_k$$

$$\mathbf{S}_k = \mathbf{H}_k \, \mathbf{P}_{k|k-1} \, \mathbf{H}_k^T + \mathbf{R}_k$$
$$\mathbf{K}_k = \mathbf{P}_{k|k-1} \, \mathbf{H}_k^T \, \mathbf{S}_k^{-1}$$

$$\hat{\mathbf{x}}_{k|k} = \hat{\mathbf{x}}_{k|k-1} + \mathbf{K}_k \, \tilde{\mathbf{z}}_k$$
$$\mathbf{P}_{k|k} = (\mathbf{I} - \mathbf{K}_k \mathbf{H}_k) \, \mathbf{P}_{k|k-1}$$

A flow diagram of the Kalman filter is shown below:

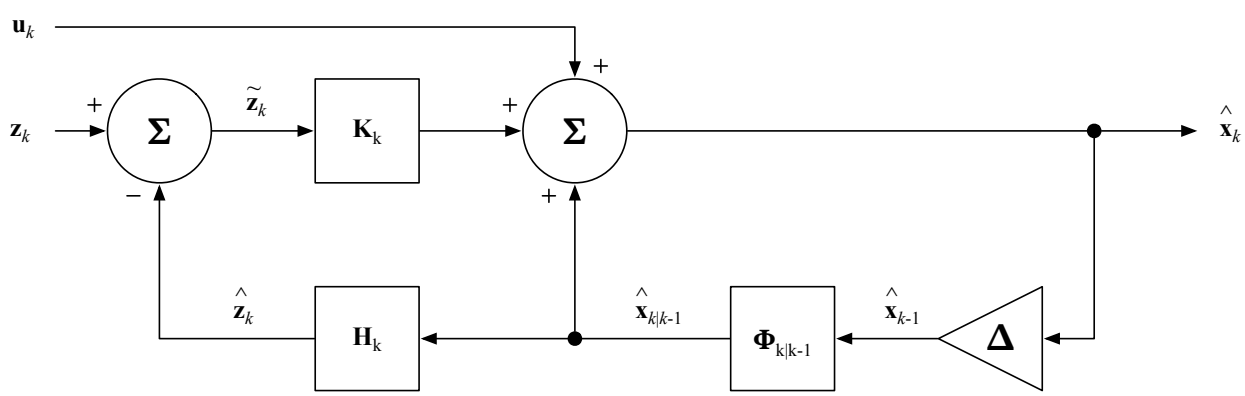

It should be noted that $\mathbf{S}_k$ is the measurement prediction covariance:

$$\mathbf{S}_k = E\{\tilde{\mathbf{z}}_k \, \tilde{\mathbf{z}}_k^T\}$$

and so

$$\mathbf{S}_k^T = \mathbf{S}_k$$

In addition, because

$$\begin{aligned}
\mathbf{K}_k &= \mathbf{P}_{k|k-1} \, \mathbf{H}_k^T \, \mathbf{S}_k^{-1} \\
\mathbf{K}_k \, \mathbf{S}_k &= \mathbf{P}_{k|k-1} \, \mathbf{H}_k^T \, \mathbf{S}_k^{-1} \, \mathbf{S}_k \\
&= \mathbf{P}_{k|k-1} \, \mathbf{H}_k^T \\
\left(\mathbf{P}_{k|k-1} \, \mathbf{H}_k^T\right)^T &= \left(\mathbf{K}_k \, \mathbf{S}_k\right)^T \\
\mathbf{H}_k \, \mathbf{P}_{k|k-1} &= \mathbf{S}_k \, \mathbf{K}_k^T
\end{aligned}$$

the corrected state error covariance $\mathbf{P}_{k|k}$ can be expressed as

$$\begin{aligned}\mathbf{P}_{k|k} &= (\mathbf{I} - \mathbf{K}_k\,\mathbf{H}_k)\,\mathbf{P}_{k|k-1} \\ &= \mathbf{P}_{k|k-1} - \mathbf{K}_k\,\mathbf{H}_k\,\mathbf{P}_{k|k-1} \\ &= \mathbf{P}_{k|k-1} - \mathbf{K}_k\,\mathbf{S}_k\,\mathbf{K}_k^T\end{aligned}$$

The advantage of this form is that it is quadratic and preserves the symmetry of $\mathbf{P}_{k|k}$. In addition, it does not rely on $\mathbf{H}_k$.

It should also be observed that we can denote $\mathbf{P}_{\mathbf{xz},k}$ as the measurement-to-state transformation cross covariance

$$\mathbf{P}_{\mathbf{xz},k} = \mathbf{P}_{k|k-1}\,\mathbf{H}_k^T$$

and denote $\mathbf{P}_{\mathbf{zz},k}$ as the measurement propagation covariance

$$\mathbf{P}_{\mathbf{zz},k} = \mathbf{H}_k\,\mathbf{P}_{k|k-1}\,\mathbf{H}_k^T$$

so that

$$\begin{aligned}\mathbf{S}_k &= \mathbf{P}_{\mathbf{zz},k} + \mathbf{R}_k \\ \mathbf{K}_k &= \mathbf{P}_{\mathbf{xz},k}\,\mathbf{S}_k^{-1}\end{aligned}$$

These results are useful in the unscented Kalman Filter formulation.

Lastly, if we combine the covariance prediction and correction equations into one equation, we obtain the discrete Riccati equation for the state estimation error covariance:

$$\mathbf{P}_{k+1|k} = \mathbf{\Phi}_{k|k-1}\mathbf{P}_{k|k-1}\mathbf{\Phi}_{k|k-1}^T - \mathbf{\Phi}_{k|k-1}\mathbf{P}_{k|k-1}\mathbf{H}_k^T\left[\mathbf{H}_k\mathbf{P}_{k|k-1}\mathbf{H}_k^T + \mathbf{R}_k\right]^{-1}\mathbf{H}_k\mathbf{P}_{k|k-1}\mathbf{\Phi}_{k|k-1}^T + \mathbf{Q}_k$$

Considerable literature exists on the solution of the Riccati equation, providing a value for $\mathbf{P}_\infty$. However, it is evident from the equation that the update of $\mathbf{P}$ is independent of the measurement vector $\mathbf{z}_k$.

2. Linear System with Nonlinear Measurements - Extended Kalman Filter Estimation

$$\mathbf{x}_{k+1} = \mathbf{\Phi}_{k+1|k}\mathbf{x}_k + \mathbf{u}_k + \mathbf{w}_k$$
$$\mathbf{z}_k = \mathbf{h}(\mathbf{x}_k) + \mathbf{v}_k$$

where $\mathbf{u}_k$ is a control input, and both $\mathbf{w}_k$ and $\mathbf{v}_k$ are white noise sequences

$$\mathbf{w}_k \sim \mathcal{N}(\mathbf{0}, \mathbf{Q}_k)\ ,\ \ \mathbf{Q}_k = E[\mathbf{w}_k\mathbf{w}_k^T]$$
$$\mathbf{v}_k \sim \mathcal{N}(\mathbf{0}, \mathbf{R}_k)\ ,\ \ \mathbf{R}_k = E[\mathbf{v}_k\mathbf{v}_k^T]$$

Extended Kalman Filter

The extended Kalman filter uses linearized matrices to implement the filtering equations.

Prediction:

$$\hat{\mathbf{x}}_{k|k-1} = \mathbf{\Phi}_{k|k-1}\hat{\mathbf{x}}_{k-1|k-1} + \mathbf{u}_k$$
$$\mathbf{P}_{k|k-1} = \mathbf{\Phi}_{k|k-1}\,\mathbf{P}_{k-1|k-1}\,\mathbf{\Phi}_{k|k-1}^T + \mathbf{Q}_k$$

Correction:

$$\hat{\mathbf{z}}_k = \mathbf{h}(\hat{\mathbf{x}}_{k|k-1})$$
$$\tilde{\mathbf{z}}_k = \mathbf{z}_k - \hat{\mathbf{z}}_k$$

$$\mathbf{H}_k = \left.\frac{\partial \mathbf{h}}{\partial \mathbf{x}_k}\right|_{\hat{\mathbf{x}}_{k|k-1}}$$

$$\mathbf{S}_k = \mathbf{H}_k\,\mathbf{P}_{k|k-1}\,\mathbf{H}_k^T + \mathbf{R}_k$$
$$\mathbf{K}_k = \mathbf{P}_{k|k-1}\,\mathbf{H}_k^T\,\mathbf{S}_k^{-1}$$

$$\hat{\mathbf{x}}_{k|k} = \hat{\mathbf{x}}_{k|k-1} + \mathbf{K}_k\,\tilde{\mathbf{z}}_k$$
$$\mathbf{P}_{k|k} = \mathbf{P}_{k|k-1} - \mathbf{K}_k\,\mathbf{S}_k\,\mathbf{K}_k^T$$

3. Nonlinear System with Nonlinear Measurements - Extended Kalman Filter Estimation

$$\mathbf{x}_{k+1} = \mathbf{f}(\mathbf{x}_k, \mathbf{u}_k) + \mathbf{w}_k$$
$$\mathbf{z}_k = \mathbf{h}(\mathbf{x}_k) + \mathbf{v}_k$$

where $\mathbf{u}_k$ is a control input, and both $\mathbf{w}_k$ and $\mathbf{v}_k$ are white noise sequences

$$\mathbf{w}_k \sim \mathcal{N}(\mathbf{0}, \mathbf{Q}_k)\ , \quad \mathbf{Q}_k = E[\mathbf{w}_k \mathbf{w}_k^T]$$
$$\mathbf{v}_k \sim \mathcal{N}(\mathbf{0}, \mathbf{R}_k)\ , \quad \mathbf{R}_k = E[\mathbf{v}_k \mathbf{v}_k^T]$$

Extended Kalman Filter

The extended Kalman filter uses linearized matrices to implement the filtering equations.

Prediction:

$$\hat{\mathbf{x}}_{k|k-1} = \mathbf{f}(\hat{\mathbf{x}}_{k-1|k-1}, \mathbf{u}_k)$$

$$\mathbf{F}_k = \left.\frac{\partial \mathbf{f}}{\partial \mathbf{x}_k}\right|_{\hat{\mathbf{x}}_{k|k-1}, \mathbf{u}_k}$$

$$\mathbf{P}_{k|k-1} = \mathbf{F}_k \, \mathbf{P}_{k-1|k-1} \, \mathbf{F}_k^T + \mathbf{Q}_k$$

Correction:

$$\hat{\mathbf{z}}_k = \mathbf{h}(\hat{\mathbf{x}}_{k|k-1})$$
$$\tilde{\mathbf{z}}_k = \mathbf{z}_k - \hat{\mathbf{z}}_k$$

$$\mathbf{H}_k = \left.\frac{\partial \mathbf{h}}{\partial \mathbf{x}_k}\right|_{\hat{\mathbf{x}}_{k|k-1}}$$

$$\mathbf{S}_k = \mathbf{H}_k \, \mathbf{P}_{k|k-1} \, \mathbf{H}_k^T + \mathbf{R}_k$$
$$\mathbf{K}_k = \mathbf{P}_{k|k-1} \, \mathbf{H}_k^T \, \mathbf{S}_k^{-1}$$

$$\hat{\mathbf{x}}_{k|k} = \hat{\mathbf{x}}_{k|k-1} + \mathbf{K}_k \, \tilde{\mathbf{z}}_k$$
$$\mathbf{P}_{k|k} = \mathbf{P}_{k|k-1} - \mathbf{K}_k \, \mathbf{S}_k \, \mathbf{K}_k^T$$

4. Linear System with Nonlinear Measurements - Unscented Kalman Filter Estimation

$$\mathbf{x}_{k+1} = \mathbf{\Phi}_{k+1|k}\mathbf{x}_k + \mathbf{u}_k + \mathbf{w}_k$$
$$\mathbf{z}_k = \mathbf{h}(\mathbf{x}_k) + \mathbf{v}_k$$

where $\mathbf{u}_k$ is a control input, and both $\mathbf{w}_k$ and $\mathbf{v}_k$ are white noise sequences

$$\mathbf{w}_k \sim \mathcal{N}(\mathbf{0}, \mathbf{Q}_k)\ ,\ \ \mathbf{Q}_k = E[\mathbf{w}_k\mathbf{w}_k^T]$$
$$\mathbf{v}_k \sim \mathcal{N}(\mathbf{0}, \mathbf{R}_k)\ ,\ \ \mathbf{R}_k = E[\mathbf{v}_k\mathbf{v}_k^T]$$

Unscented Kalman Filter

Prediction:

$$\hat{\mathbf{x}}_{k|k-1} = \mathbf{\Phi}_{k|k-1}\hat{\mathbf{x}}_{k-1|k-1} + \mathbf{u}_k$$
$$\mathbf{P}_{k|k-1} = \mathbf{\Phi}_{k|k-1}\,\mathbf{P}_{k-1|k-1}\,\mathbf{\Phi}_{k|k-1}^T + \mathbf{Q}_k$$

Generation of sigma points and weights:

$$\mathbf{L}_{k|k-1} = \sqrt{(n+\lambda)\,\mathbf{P}_{k|k-1}}$$

$$\chi_0 = \hat{\mathbf{x}}_{k|k-1}$$
$$\chi_i = \hat{\mathbf{x}}_{k|k-1} + \left[\mathbf{L}_{k|k-1}\right]_i\ ,\ i = 1,\ldots,n$$
$$\chi_{i+n} = \hat{\mathbf{x}}_{k|k-1} - \left[\mathbf{L}_{k|k-1}\right]_i\ ,\ i = 1,\ldots,n$$
$$W_{m,0} = \frac{\lambda}{n+\lambda}$$
$$W_{c,0} = W_{m,0} + (1-\alpha^2+\beta)$$
$$W_{m,i} = W_{c,i} = \frac{1}{2(n+\lambda)}\ ,\ i = 1,\ldots,2n$$

where

$\sqrt{\mathbf{M}}$ is the lower triangular Cholesky decomposition of the symmetric matrix $\mathbf{M}$
$\left[\mathbf{L}\right]_i$ is the i th column of the lower triangular matrix $\mathbf{L}$

W_m is a weighting factor used to predict the measurement vector
W_c is a weighting factor used to predict the correction covariance matrices

$n = \dim \hat{\mathbf{x}}$
λ is a scaling parameter that determines the extent of the spread of the sigma points about the mean
β is a parameter that determines the distribution of the PDF of the state vector; typically set to 2 for Gaussian
α is an adjustment parameter, [0, 1)
κ is an adjustment parameter, [0, ∞)

$$\lambda = \alpha^2(n + \kappa) - n$$

Some representative values for α, β, and κ are

$$\alpha = 0.5$$
$$\beta = 2$$
$$\kappa = 0$$

Correction:

$$\hat{\mathbf{z}}_k = \sum_{i=0}^{2n} W_{m,i}\, \mathbf{h}(\chi_i)$$
$$\tilde{\mathbf{z}}_k = \mathbf{z}_k - \hat{\mathbf{z}}_k$$

$$\mathbf{P}_{\mathbf{xz},k} = \sum_{i=0}^{2n} W_{c,i} \left[\chi_i - \hat{\mathbf{x}}_{k|k-1}\right] \left[\mathbf{h}(\chi_i) - \hat{\mathbf{z}}_k\right]^T$$

$$\mathbf{P}_{\mathbf{zz},k} = \sum_{i=0}^{2n} W_{c,i} \left[\mathbf{h}(\chi_i) - \hat{\mathbf{z}}_k\right] \left[\mathbf{h}(\chi_i) - \hat{\mathbf{z}}_k\right]^T$$

$$\mathbf{S}_k = \mathbf{P}_{\mathbf{zz},k} + \mathbf{R}_k$$
$$\mathbf{K}_k = \mathbf{P}_{\mathbf{xz},k}\, \mathbf{S}_k^{-1}$$

$$\hat{\mathbf{x}}_{k|k} = \hat{\mathbf{x}}_{k|k-1} + \mathbf{K}_k\, \tilde{\mathbf{z}}_k$$
$$\mathbf{P}_{k|k} = \mathbf{P}_{k|k-1} - \mathbf{K}_k\, \mathbf{S}_k\, \mathbf{K}_k^T$$

It is important to observe that the expression for $\mathbf{P}_{k|k}$ is the form that does not use a linear $\mathbf{H}_k$ matrix, since the unscented transformation does not rely on linearization of $\mathbf{h}(\mathbf{x}_k)$.

5. Constant Velocity Motion

The target state is specified in north and east Cartesian coordinates

$$\mathbf{x} = \begin{bmatrix} n \\ v_n \\ e \\ v_e \end{bmatrix}$$

We model target motion using constant velocity motion with random acceleration adjustments as the process noise

$$\begin{bmatrix} n_k \\ v_{n,k} \\ e_k \\ v_{e,k} \end{bmatrix} = \begin{bmatrix} 1 & T & 0 & 0 \\ 0 & 1 & 0 & 0 \\ 0 & 0 & 1 & T \\ 0 & 0 & 0 & 1 \end{bmatrix} \begin{bmatrix} n_{k-1} \\ v_{n,k-1} \\ e_{k-1} \\ v_{e,k-1} \end{bmatrix} + \begin{bmatrix} \frac{T^2}{2} & 0 \\ T & 0 \\ 0 & \frac{T^2}{2} \\ 0 & T \end{bmatrix} \begin{bmatrix} w_{an,k} \\ w_{ae,k} \end{bmatrix}$$

The process noise covariance, $\mathbf{Q}_k$, is

$$\mathbf{Q}_k = \begin{bmatrix} \frac{T^2}{2} & 0 \\ T & 0 \\ 0 & \frac{T^2}{2} \\ 0 & T \end{bmatrix} \begin{bmatrix} \sigma_{an,k}^2 & 0 \\ 0 & \sigma_{ae,k}^2 \end{bmatrix} \begin{bmatrix} \frac{T^2}{2} & T & 0 & 0 \\ 0 & 0 & \frac{T^2}{2} & T \end{bmatrix} = \begin{bmatrix} \sigma_{an,k}^2 \frac{T^4}{4} & \sigma_{an,k}^2 \frac{T^3}{2} & 0 & 0 \\ \sigma_{an,k}^2 \frac{T^3}{2} & \sigma_{an,k}^2 T^2 & 0 & 0 \\ 0 & 0 & \sigma_{ae,k}^2 \frac{T^4}{4} & \sigma_{ae,k}^2 \frac{T^3}{2} \\ 0 & 0 & \sigma_{ae,k}^2 \frac{T^3}{2} & \sigma_{ae,k}^2 T^2 \end{bmatrix}$$

where $\sigma_{an,k}^2$ and $\sigma_{ae,k}^2$ are the north and east process acceleration noise variances, respectively.

It should be noted that we can also choose to model target motion using constant velocity motion with random velocity adjustments as the process noise

$$\begin{bmatrix} n_k \\ v_{n,k} \\ e_k \\ v_{e,k} \end{bmatrix} = \begin{bmatrix} 1 & T & 0 & 0 \\ 0 & 1 & 0 & 0 \\ 0 & 0 & 1 & T \\ 0 & 0 & 0 & 1 \end{bmatrix} \begin{bmatrix} n_{k-1} \\ v_{n,k-1} \\ e_{k-1} \\ v_{e,k-1} \end{bmatrix} + \begin{bmatrix} T & 0 \\ 1 & 0 \\ 0 & T \\ 0 & 1 \end{bmatrix} \begin{bmatrix} w_{vn,k} \\ w_{ve,k} \end{bmatrix}$$

where

$$T = t_k - t_{k-1}$$

so that $\mathbf{Q}_k$ becomes

$$\mathbf{Q}_k = \begin{bmatrix} T & 0 \\ 1 & 0 \\ 0 & T \\ 0 & 1 \end{bmatrix} \begin{bmatrix} \sigma_{vn,k}^2 & 0 \\ 0 & \sigma_{ve,k}^2 \end{bmatrix} \begin{bmatrix} T & 1 & 0 & 0 \\ 0 & 0 & T & 1 \end{bmatrix} = \begin{bmatrix} \sigma_{vn,k}^2 T^2 & \sigma_{vn,k}^2 T & 0 & 0 \\ \sigma_{vn,k}^2 T & \sigma_{vn,k}^2 & 0 & 0 \\ 0 & 0 & \sigma_{ve,k}^2 T^2 & \sigma_{ve,k}^2 T \\ 0 & 0 & \sigma_{ve,k}^2 T & \sigma_{ve,k}^2 \end{bmatrix}$$

where $\sigma_{vn,k}^2$ and $\sigma_{ve,k}^2$ are the north and east process velocity noise variances, respectively.

6. Constant Turn Motion

Consider the constant angular motion depicted in the below figure, where **a** is the acceleration vector, **v** is the velocity vector, ϕ is the heading (referenced clockwise from north), C is the center of turn rotation, ω is the turn rate, ρ_C is the radius of curvature, $\hat{\mathbf{n}}$ and $\hat{\mathbf{e}}$ are the north and east unit vectors, respectively, and $\hat{\mathbf{f}}$ and $\hat{\mathbf{s}}$ are the forward and lateral (i.e., sideways) unit vectors, respectively.

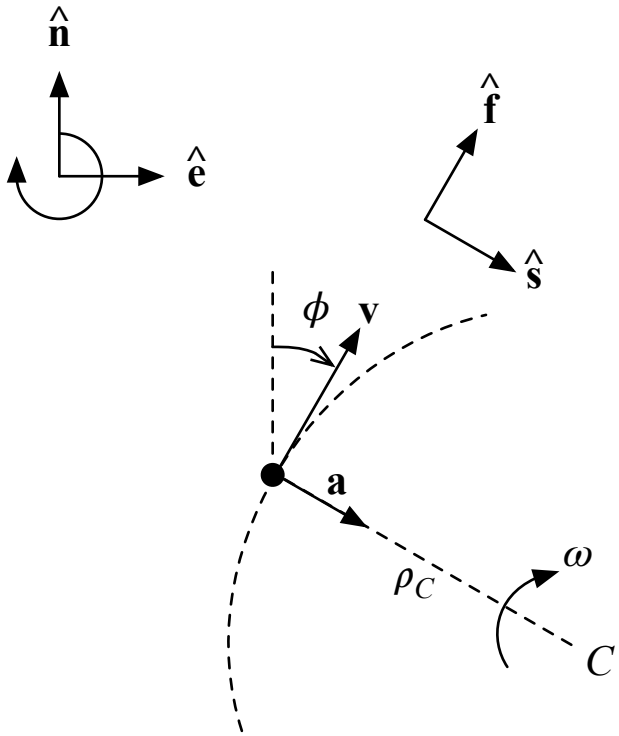

From basic engineering mechanics, the velocity, **v**, for constant angular motion is

$$\begin{aligned}\mathbf{v} &= v\hat{\mathbf{f}} \\ &= \rho_C \omega \hat{\mathbf{f}}\end{aligned}$$

and the acceleration, **a**, for constant angular motion is

$$\begin{aligned}\mathbf{a} &= \frac{d\mathbf{v}}{dt} \\ &= v\omega\hat{\mathbf{s}}\end{aligned}$$

where v is the forward velocity

$$
\begin{aligned}
v &= \|\mathbf{v}\| \\
&= \sqrt{v_n^2 + v_e^2}
\end{aligned}
$$

For constant turn motion, the heading ϕ evolves at a constant rate ω

$$\phi(t) = \phi_0 + \omega(t - t_0)$$

where ϕ_0 is the heading at time t_0. For notation convenience, we define

$$T \equiv t - t_0$$

so that

$$\phi = \phi_0 + \omega T$$

The rotation of axes formulae relating $\hat{\mathbf{f}}$ and $\hat{\mathbf{s}}$ to $\hat{\mathbf{n}}$ and $\hat{\mathbf{e}}$ are

$$
\begin{aligned}
\hat{\mathbf{f}} &= (\cos\phi)\hat{\mathbf{n}} + (\sin\phi)\hat{\mathbf{e}} \\
\hat{\mathbf{s}} &= (-\sin\phi)\hat{\mathbf{n}} + (\cos\phi)\hat{\mathbf{e}}
\end{aligned}
$$

Then

$$
\begin{aligned}
\mathbf{a} &= v\omega\hat{\mathbf{s}} \\
&= (-v\omega\sin\phi)\hat{\mathbf{n}} + (v\omega\cos\phi)\hat{\mathbf{e}} \\
&= a_n\hat{\mathbf{n}} + a_e\hat{\mathbf{e}}
\end{aligned}
$$

where

$$
\begin{aligned}
a_n &= -v\omega\sin\phi \\
a_e &= v\omega\cos\phi
\end{aligned}
$$

But

$$
\begin{aligned}
\cos\phi &= \cos(\phi_0 + \omega T) \\
&= \cos\phi_0\cos(\omega T) - \sin\phi_0\sin(\omega T)
\end{aligned}
$$

and

$$
\begin{aligned}
\sin\phi &= \sin(\phi_0 + \omega T) \\
&= \sin\phi_0\cos(\omega T) + \cos\phi_0\sin(\omega T)
\end{aligned}
$$

At $t = t_0$ (i.e., $T = 0$),

$$\phi = \phi_0$$

and so

$$\begin{aligned}\mathbf{v} &= v\hat{\mathbf{f}} \\ &= (v\cos\phi_0)\hat{\mathbf{n}} + (v\sin\phi_0)\hat{\mathbf{e}} \\ &= v_{n0}\hat{\mathbf{n}} + v_{e0}\hat{\mathbf{e}}\end{aligned}$$

where

$$\begin{aligned}v_{n0} &= v\cos\phi_0 \\ v_{e0} &= v\sin\phi_0\end{aligned}$$

Thus

$$\begin{aligned}a_n &= -v\omega\left(\sin\phi_0\cos(\omega T) + \cos\phi_0\sin(\omega T)\right) \\ &= -v_{n0}\omega\sin(\omega T) - v_{e0}\omega\cos(\omega T)\end{aligned}$$

$$\begin{aligned}a_e &= v\omega\left(\cos\phi_0\cos(\omega T) - \sin\phi_0\sin(\omega T)\right) \\ &= v_{n0}\omega\cos(\omega T) - v_{e0}\omega\sin(\omega T)\end{aligned}$$

Then, the expressions for north and east velocities are

$$\begin{aligned}v_n &= v_{n0} + \int_0^T a_n(\tau)d\tau \\ &= v_{n0} + v_{n0}\cos(\omega\tau)\Big|_0^T - v_{e0}\sin(\omega\tau)\Big|_0^T \\ &= v_{n0} + v_{n0}(\cos(\omega T) - 1) - v_{e0}(\sin(\omega T) - 0) \\ &= v_{n0}\cos(\omega T) - v_{e0}\sin(\omega T)\end{aligned}$$

and

$$\begin{aligned}v_e &= v_{e0} + \int_0^T a_e(\tau)d\tau \\ &= v_{e0} + v_{n0}\sin(\omega\tau)\Big|_0^T + v_{e0}\cos(\omega\tau)\Big|_0^T \\ &= v_{e0} + v_{n0}(\sin(\omega T) - 0) + v_{e0}(\cos(\omega T) - 1) \\ &= v_{n0}\sin(\omega T) + v_{e0}\cos(\omega T)\end{aligned}$$

Knowing the velocity expressions, we determine the position expressions to be

$$
\begin{aligned}
n &= n_0 + \int_0^T v_n(\tau) d\tau \\
&= n_0 + \frac{v_{n0}}{\omega} \sin(\omega\tau)\Big|_0^T + \frac{v_{e0}}{\omega} \cos(\omega\tau)\Big|_0^T \\
&= n_0 + \frac{v_{n0}}{\omega}(\sin(\omega T) - 0) + \frac{v_{e0}}{\omega}(\cos(\omega T) - 1) \\
&= n_0 + v_{n0}\frac{\sin(\omega T)}{\omega} + v_{e0}\frac{\cos(\omega T) - 1}{\omega} \\
&= n_0 + v_{n0}\frac{\sin(\omega T)}{\omega} - v_{e0}\frac{1 - \cos(\omega T)}{\omega}
\end{aligned}
$$

and

$$
\begin{aligned}
e &= e_0 + \int_0^T v_e(\tau) d\tau \\
&= e_0 - \frac{v_{n0}}{\omega} \cos(\omega\tau)\Big|_0^T + \frac{v_{e0}}{\omega} \sin(\omega\tau)\Big|_0^T \\
&= e_0 - \frac{v_{n0}}{\omega}(\cos(\omega T) - 1) + \frac{v_{e0}}{\omega}(\sin(\omega T) - 0) \\
&= e_0 - v_{n0}\frac{\cos(\omega T) - 1}{\omega} + v_{e0}\frac{\sin(\omega T)}{\omega} \\
&= e_0 + v_{n0}\frac{1 - \cos(\omega T)}{\omega} + v_{e0}\frac{\sin(\omega T)}{\omega}
\end{aligned}
$$

Collecting equations, we have the discrete-time model for constant turn rate motion with random acceleration adjustments as the process noise:

$$
\begin{aligned}
n_{k+1} &= n_k + \frac{\sin(\omega T)}{\omega} v_{n,k} - \frac{1 - \cos(\omega T)}{\omega} v_{e,k} + \frac{T^2}{2} w_{an,k} \\
v_{n,k+1} &= \cos(\omega T) v_{n,k} - \sin(\omega T) v_{e,k} + T w_{an,k} \\
e_{k+1} &= e_k + \frac{1 - \cos(\omega T)}{\omega} v_{n,k} + \frac{\sin(\omega T)}{\omega} v_{e,k} + \frac{T^2}{2} w_{ae,k} \\
v_{e,k+1} &= \sin(\omega T) v_{n,k} + \cos(\omega T) v_{e,k} + T w_{ae,k} \\
\omega_{k+1} &= \omega_k + T w_{\alpha,k}
\end{aligned}
$$

where

$$T = t_{k+1} - t_k$$

and where $w_{an,k}$ and $w_{ae,k}$ are the north and east acceleration disturbances, and $w_{\alpha,k}$ is the angular acceleration disturbance.

In matrix form, the target state vector is

$$\mathbf{x} = \begin{bmatrix} n \\ v_n \\ e \\ v_e \\ \omega \end{bmatrix}$$

and the state model equation is

$$\mathbf{x}_{k+1} = \mathbf{f}(\mathbf{x}_k) + \mathbf{u}_k + \mathbf{\Gamma}_k \mathbf{w}_k$$

where

$$\mathbf{f}(\mathbf{x}_k) = \begin{bmatrix} 1 & \dfrac{\sin(\omega T)}{\omega} & 0 & -\dfrac{1-\cos(\omega T)}{\omega} & 0 \\ 0 & \cos(\omega T) & 0 & -\sin(\omega T) & 0 \\ 0 & \dfrac{1-\cos(\omega T)}{\omega} & 1 & \dfrac{\sin(\omega T)}{\omega} & 0 \\ 0 & \sin(\omega T) & 0 & \cos(\omega T) & 0 \\ 0 & 0 & 0 & 0 & 1 \end{bmatrix} \begin{bmatrix} n_k \\ v_{n,k} \\ e_k \\ v_{e,k} \\ \omega_k \end{bmatrix}$$

$$\mathbf{\Gamma}_k = \begin{bmatrix} \dfrac{T^2}{2} & 0 & 0 \\ T & 0 & 0 \\ 0 & \dfrac{T^2}{2} & 0 \\ 0 & T & 0 \\ 0 & 0 & T \end{bmatrix}$$

$$\mathbf{w}_k = \begin{bmatrix} w_{an,k} \\ w_{ae,k} \\ w_{\alpha,k} \end{bmatrix}$$

The process noise covariance, $\mathbf{Q}_k$, is

$$\mathbf{Q}_k = \begin{bmatrix} \sigma_{an,k}^2 & 0 & 0 \\ 0 & \sigma_{ae,k}^2 & 0 \\ 0 & 0 & \sigma_{\alpha,k}^2 \end{bmatrix}$$

and where $\sigma_{an,k}^2$ and $\sigma_{ae,k}^2$ are the north and east acceleration disturbance variances, and $\sigma_{\alpha,k}^2$ is the angular acceleration disturbance variance.

Note that

$$\lim_{\omega \to 0} \frac{\sin(\omega T)}{\omega} \overset{*}{=} \lim_{\omega \to 0} \frac{T\cos(\omega T)}{1} = T$$

and that

$$\lim_{\omega \to 0} \frac{1 - \cos(\omega T)}{\omega} \overset{*}{=} \lim_{\omega \to 0} \frac{T\sin(\omega T)}{1} = 0$$

Hence, for $\omega = 0$, the constant turn rate motion model reduces to the constant velocity model:

$$\mathbf{f}(\mathbf{x}_k)\Big|_{\omega=0} = \begin{bmatrix} 1 & T & 0 & 0 & 0 \\ 0 & 1 & 0 & 0 & 0 \\ 0 & 0 & 1 & T & 0 \\ 0 & 0 & 0 & 1 & 0 \\ 0 & 0 & 0 & 0 & 1 \end{bmatrix} \begin{bmatrix} n_k \\ v_{n,k} \\ e_k \\ v_{e,k} \\ \omega_k \end{bmatrix}$$

The linearized form of the state transition function is

$$\mathbf{F}_k = \left.\frac{\partial \mathbf{f}}{\partial \mathbf{x}_k}\right|_{\hat{\mathbf{x}}_{k|k-1}} = \begin{bmatrix} \frac{\partial n}{\partial n} & \frac{\partial n}{\partial v_n} & \frac{\partial n}{\partial e} & \frac{\partial n}{\partial v_e} & \frac{\partial n}{\partial \omega} \\ \frac{\partial v_n}{\partial n} & \frac{\partial v_n}{\partial v_n} & \frac{\partial v_n}{\partial e} & \frac{\partial v_n}{\partial v_e} & \frac{\partial v_n}{\partial \omega} \\ \frac{\partial e}{\partial n} & \frac{\partial e}{\partial v_n} & \frac{\partial e}{\partial e} & \frac{\partial e}{\partial v_e} & \frac{\partial e}{\partial \omega} \\ \frac{\partial v_e}{\partial n} & \frac{\partial v_e}{\partial v_n} & \frac{\partial v_e}{\partial e} & \frac{\partial v_e}{\partial v_e} & \frac{\partial v_e}{\partial \omega} \\ \frac{\partial \omega}{\partial n} & \frac{\partial \omega}{\partial v_n} & \frac{\partial \omega}{\partial e} & \frac{\partial \omega}{\partial v_e} & \frac{\partial \omega}{\partial \omega} \end{bmatrix}_{\mathbf{x}=\hat{\mathbf{x}}_{k|k-1}}$$

The upper 4×4 block terms are simply the n, v_n, e, v_e coefficients of the state transition function. The angular partial derivatives are as follows:

$$\frac{\partial n}{\partial \omega} = v_n \left[\frac{T\cos(\omega T)}{\omega} - \frac{\sin(\omega T)}{\omega^2}\right] - v_e \left[\frac{T\sin(\omega T)}{\omega} - \frac{1-\cos(\omega T)}{\omega^2}\right]$$

$$\frac{\partial v_n}{\partial \omega} = -v_n T\sin(\omega T) - v_e T\cos(\omega T)$$

$$\frac{\partial e}{\partial \omega} = v_n \left[\frac{T\sin(\omega T)}{\omega} - \frac{1-\cos(\omega T)}{\omega^2}\right] + v_e \left[\frac{T\cos(\omega T)}{\omega} - \frac{\sin(\omega T)}{\omega^2}\right]$$

$$\frac{\partial v_e}{\partial \omega} = v_n T\cos(\omega T) - v_e T\sin(\omega T)$$

$$\frac{\partial \omega}{\partial n} = \frac{\partial \omega}{\partial v_n} = \frac{\partial \omega}{\partial e} = \frac{\partial \omega}{\partial v_e} = 0$$

$$\frac{\partial \omega}{\partial \omega} = 1$$

Hence

$$
\mathbf{F}_k = \begin{bmatrix}
1 & \dfrac{\sin(\omega T)}{\omega} & 0 & -\dfrac{1-\cos(\omega T)}{\omega} & v_n\left[\dfrac{T\cos(\omega T)}{\omega} - \dfrac{\sin(\omega T)}{\omega^2}\right] - v_e\left[\dfrac{T\sin(\omega T)}{\omega} - \dfrac{1-\cos(\omega T)}{\omega^2}\right] \\
0 & \cos(\omega T) & 0 & -\sin(\omega T) & -v_n T\sin(\omega T) - v_e T\cos(\omega T) \\
0 & \dfrac{1-\cos(\omega T)}{\omega} & 1 & \dfrac{\sin(\omega T)}{\omega} & v_n\left[\dfrac{T\sin(\omega T)}{\omega} - \dfrac{1-\cos(\omega T)}{\omega^2}\right] + v_e\left[\dfrac{T\cos(\omega T)}{\omega} - \dfrac{\sin(\omega T)}{\omega^2}\right] \\
0 & \sin(\omega T) & 0 & \cos(\omega T) & v_n T\cos(\omega T) - v_e T\sin(\omega T) \\
0 & 0 & 0 & 0 & 1
\end{bmatrix}_{\mathbf{x}=\hat{\mathbf{x}}_{k|k-1}}
$$

Note that

$$
\begin{aligned}
&\lim_{\omega\to 0}\left[\frac{T\cos(\omega T)}{\omega} - \frac{\sin(\omega T)}{\omega^2}\right] \\
&\quad = \lim_{\omega\to 0}\left[\frac{\omega T\cos(\omega T) - \sin(\omega T)}{\omega^2}\right] \\
&\quad \overset{*}{=} \lim_{\omega\to 0}\left[\frac{T\cos(\omega T) - \omega T^2\sin(\omega T) - T\cos(\omega T)}{2\omega}\right] \\
&\quad = \lim_{\omega\to 0}\left[\frac{-T^2\sin(\omega T)}{2}\right] \\
&\quad = 0
\end{aligned}
$$

and

$$
\begin{aligned}
&\lim_{\omega\to 0}\left[\frac{T\sin(\omega T)}{\omega}-\frac{1-\cos(\omega T)}{\omega^2}\right]\\
&\quad=\lim_{\omega\to 0}\left[\frac{\omega T\sin(\omega T)-1+\cos(\omega T)}{\omega^2}\right]\\
&\quad\overset{*}{=}\lim_{\omega\to 0}\left[\frac{T\sin(\omega T)+\omega T^2\cos(\omega T)-T\sin(\omega T)}{2\omega}\right]\\
&\quad=\lim_{\omega\to 0}\left[\frac{T^2\cos(\omega T)}{2}\right]\\
&\quad=\frac{T^2}{2}
\end{aligned}
$$

Then, for $\omega = 0$, $\mathbf{F}_k$ becomes

$$
\mathbf{F}_k\Big|_{\omega=0}=\begin{bmatrix}1 & T & 0 & 0 & -v_e\dfrac{T^2}{2}\\ 0 & 1 & 0 & 0 & -v_eT\\ 0 & 0 & 1 & T & v_n\dfrac{T^2}{2}\\ 0 & 0 & 0 & 1 & v_nT\\ 0 & 0 & 0 & 0 & 1\end{bmatrix}_{\mathbf{x}=\hat{\mathbf{x}}_{k|k-1}}
$$

7. Computed Cartesian Measurements

Measurements are north and east values that are computed from target range and bearing measurements, where bearing is referenced clockwise from north

$$\mathbf{z} = \begin{bmatrix} z_n \\ z_e \end{bmatrix} = \begin{bmatrix} r\cos\theta \\ r\sin\theta \end{bmatrix}$$

The measurements are obtained with random measurement transformation errors

$$\begin{bmatrix} z_{n,k} \\ z_{e,k} \end{bmatrix} = \begin{bmatrix} 1 & 0 & 0 & 0 \\ 0 & 0 & 1 & 0 \end{bmatrix} \begin{bmatrix} n_k \\ v_{n,k} \\ e_k \\ v_{e,k} \end{bmatrix} + \begin{bmatrix} \gamma_{n,k} \\ \gamma_{e,k} \end{bmatrix}$$

The transformed measurement covariances for $\gamma_{n,k}$ and $\gamma_{e,k}$ are derived from

$$\mathbf{R}_{\gamma,k} = \mathbf{M}_{r,\theta,k}\, \mathbf{R}_{r,\theta,k}\, \mathbf{M}_{r,\theta,k}^T$$

where

$$\mathbf{M}_{r,\theta,k} = \begin{bmatrix} \cos\theta_k & -r_k\sin\theta_k \\ \sin\theta_k & r_k\cos\theta_k \end{bmatrix}$$

and

$$\mathbf{R}_{r,\theta,k} = \begin{bmatrix} \sigma_{r,k}^2 & 0 \\ 0 & \sigma_{\theta,k}^2 \end{bmatrix}$$

The variances $\sigma_{r,k}^2$ and $\sigma_{\theta,k}^2$ are the range and bearing measurement noise variances, respectively.

Carrying out the matrix multiplications yields

$$\mathbf{R}_{\gamma,k} = \begin{bmatrix} \cos\theta_k & -r_k\sin\theta_k \\ \sin\theta_k & r_k\cos\theta_k \end{bmatrix} \begin{bmatrix} \sigma_{r,k}^2 & 0 \\ 0 & \sigma_{\theta,k}^2 \end{bmatrix} \begin{bmatrix} \cos\theta_k & \sin\theta_k \\ -r_k\sin\theta_k & r_k\cos\theta_k \end{bmatrix}$$

$$= \begin{bmatrix} \sigma_{r,k}^2 \cos^2\theta_k + r_k^2\sigma_{\theta,k}^2 \sin^2\theta_k & \sigma_{r,k}^2 \cos\theta_k \sin\theta_k - r_k^2\sigma_{\theta,k}^2 \sin\theta_k \cos\theta_k \\ \sigma_{r,k}^2 \sin\theta_k \cos\theta_k - r_k^2\sigma_{\theta,k}^2 \cos\theta_k \sin\theta_k & \sigma_{r,k}^2 \sin^2\theta_k + r_k^2\sigma_{\theta,k}^2 \cos^2\theta_k \end{bmatrix}$$

$$= \begin{bmatrix} \sigma_{r,k}^2 \cos^2\theta_k + r_k^2\sigma_{\theta,k}^2 \sin^2\theta_k & (\sigma_{r,k}^2 - r_k^2\sigma_{\theta,k}^2)\cos\theta_k \sin\theta_k \\ (\sigma_{r,k}^2 - r_k^2\sigma_{\theta,k}^2)\cos\theta_k \sin\theta_k & \sigma_{r,k}^2 \sin^2\theta_k + r_k^2\sigma_{\theta,k}^2 \cos^2\theta_k \end{bmatrix}$$

8. Polar Measurements

Measurements are target range and bearing, where bearing is referenced clockwise from north

$$\mathbf{z} = \begin{bmatrix} r \\ \theta \end{bmatrix}$$

The measurements are obtained with random measurement errors

$$\begin{bmatrix} r_k \\ \theta_k \end{bmatrix} = \begin{bmatrix} \sqrt{n_k^2 + e_k^2} \\ \arctan \dfrac{e_k}{n_k} \end{bmatrix} + \begin{bmatrix} \nu_{r,k} \\ \nu_{\theta,k} \end{bmatrix}$$

where the arctan() function is a four-quadrant arctangent function, e.g., `atan2(y,x)`.

The $\mathbf{H}_k$ matrix is the linearization

$$\mathbf{H}_k = \begin{bmatrix} \dfrac{\partial r}{\partial n} & \dfrac{\partial r}{\partial v_n} & \dfrac{\partial r}{\partial e} & \dfrac{\partial r}{\partial v_e} \\ \dfrac{\partial \theta}{\partial n} & \dfrac{\partial \theta}{\partial v_n} & \dfrac{\partial \theta}{\partial e} & \dfrac{\partial \theta}{\partial v_e} \end{bmatrix}_{\mathbf{x}=\hat{\mathbf{x}}_{k|k-1}}$$

$$= \begin{bmatrix} \dfrac{n}{\sqrt{n^2+e^2}} & 0 & \dfrac{e}{\sqrt{n^2+e^2}} & 0 \\ -\dfrac{e}{n^2+e^2} & 0 & \dfrac{n}{n^2+e^2} & 0 \end{bmatrix}_{\mathbf{x}=\hat{\mathbf{x}}_{k|k-1}}$$

The measurement noise covariance, $\mathbf{R}_k$, is

$$\mathbf{R}_k = \begin{bmatrix} \sigma_{r,k}^2 & 0 \\ 0 & \sigma_{\theta,k}^2 \end{bmatrix}$$

where $\sigma_{r,k}^2$ and $\sigma_{\theta,k}^2$ are the range and bearing measurement noise variances, respectively.

9. Polar Measurements with Direction Cosines

Measurements are target range and bearing direction cosines, where bearing is referenced clockwise from north

$$\mathbf{z} = \begin{bmatrix} r \\ \cos\theta \\ \sin\theta \end{bmatrix}$$

The measurements are obtained with random measurement errors

$$\begin{bmatrix} r_k \\ \Lambda_{n,k} \\ \Lambda_{e,k} \end{bmatrix} = \begin{bmatrix} r_k \\ \cos\theta_k \\ \sin\theta_k \end{bmatrix} = \begin{bmatrix} \sqrt{n_k^2 + e_k^2} \\ \dfrac{n_k}{\sqrt{n_k^2 + e_k^2}} \\ \dfrac{e_k}{\sqrt{n_k^2 + e_k^2}} \end{bmatrix} + \begin{bmatrix} \nu_{r,k} \\ \nu_{\Lambda_{n,k}} \\ \nu_{\Lambda_{e,k}} \end{bmatrix}$$

The $\mathbf{H}_k$ matrix is the linearization

$$\mathbf{H}_k = \begin{bmatrix} \frac{\partial r}{\partial n} & \frac{\partial r}{\partial v_n} & \frac{\partial r}{\partial e} & \frac{\partial r}{\partial v_e} \\ \frac{\partial \Lambda_n}{\partial n} & \frac{\partial \Lambda_n}{\partial v_n} & \frac{\partial \Lambda_n}{\partial e} & \frac{\partial \Lambda_n}{\partial v_e} \\ \frac{\partial \Lambda_e}{\partial n} & \frac{\partial \Lambda_e}{\partial v_n} & \frac{\partial \Lambda_e}{\partial e} & \frac{\partial \Lambda_e}{\partial v_e} \end{bmatrix}_{\mathbf{x}=\hat{\mathbf{x}}_{k|k-1}}$$

$$= \begin{bmatrix} \frac{n}{\sqrt{n^2+e^2}} & 0 & \frac{e}{\sqrt{n^2+e^2}} & 0 \\ \frac{e^2}{\left(\sqrt{n^2+e^2}\right)^3} & 0 & -\frac{ne}{\left(\sqrt{n^2+e^2}\right)^3} & 0 \\ -\frac{ne}{\left(\sqrt{n^2+e^2}\right)^3} & 0 & \frac{n^2}{\left(\sqrt{n^2+e^2}\right)^3} & 0 \end{bmatrix}_{\mathbf{x}=\hat{\mathbf{x}}_{k|k-1}}$$

The measurement noise covariance, $\mathbf{R}_k$, is

$$\mathbf{R}_k = \begin{bmatrix} \sigma_{r,k}^2 & 0 & 0 \\ 0 & \sigma_{\Lambda n,k}^2 & 0 \\ 0 & 0 & \sigma_{\Lambda e,k}^2 \end{bmatrix}$$

where $\sigma_{r,k}^2$, $\sigma_{\Lambda n,k}^2$, and $\sigma_{\Lambda e,k}^2$ are the range and the north and east direction cosine measurement noise variances, respectively.

10. Polar Measurements with Range Rate

Measurements are target range, range rate, and bearing, where bearing is referenced clockwise from north

$$\mathbf{z} = \begin{bmatrix} r \\ \dot{r} \\ \theta \end{bmatrix}$$

The measurements are obtained with random measurement errors

$$\begin{bmatrix} r_k \\ v_{r,k} \\ \theta_k \end{bmatrix} = \begin{bmatrix} \sqrt{n_k^2 + e_k^2} \\ \dfrac{n_k v_{n,k} + e_k v_{e,k}}{\sqrt{n_k^2 + e_k^2}} \\ \arctan \dfrac{e_k}{n_k} \end{bmatrix} + \begin{bmatrix} \nu_{r,k} \\ \nu_{\dot{r},k} \\ \nu_{\theta,k} \end{bmatrix}$$

where the arctan() function is a four-quadrant arctangent function, e.g., `atan2(y,x)`.

The $\mathbf{H}_k$ matrix is the linearization

$$\mathbf{H}_k = \begin{bmatrix} \frac{\partial r}{\partial n} & \frac{\partial r}{\partial v_n} & \frac{\partial r}{\partial e} & \frac{\partial r}{\partial v_e} \\ \frac{\partial v_r}{\partial n} & \frac{\partial v_r}{\partial v_n} & \frac{\partial v_r}{\partial e} & \frac{\partial v_r}{\partial v_e} \\ \frac{\partial \theta}{\partial n} & \frac{\partial \theta}{\partial v_n} & \frac{\partial \theta}{\partial e} & \frac{\partial \theta}{\partial v_e} \end{bmatrix}_{\mathbf{x}=\hat{\mathbf{x}}_{k|k-1}}$$

$$= \begin{bmatrix} \frac{n}{\sqrt{n^2+e^2}} & 0 & \frac{e}{\sqrt{n^2+e^2}} & 0 \\ 0 & \frac{n}{\sqrt{n^2+e^2}} & 0 & \frac{e}{\sqrt{n^2+e^2}} \\ -\frac{e}{n^2+e^2} & 0 & \frac{n}{n^2+e^2} & 0 \end{bmatrix}_{\mathbf{x}=\hat{\mathbf{x}}_{k|k-1}}$$

where we have chosen to use the linearization known as the Alternative Extended Kalman Filter (AEKF) formulation for the range rate partial derivatives. The entries of $\mathbf{H}_k$ for the partial derivatives $\frac{\partial v_r}{\partial n}$ and $\frac{\partial v_r}{\partial n}$ can be zeroed because they cancel one another through the linear expansion of $\hat{\mathbf{z}}_k = \mathbf{H}_k \hat{\mathbf{x}}_{k|k-1}$. The AEKF improves the numerical stability of the *a posteriori* Kalman filter estimates when incorporating range rate measurements. For more information, see the reference given at the end of this section.

The measurement noise covariance, $\mathbf{R}_k$, is

$$\mathbf{R}_k = \begin{bmatrix} \sigma_{r,k}^2 & 0 & 0 \\ 0 & \sigma_{v_r,k}^2 & 0 \\ 0 & 0 & \sigma_{\theta,k}^2 \end{bmatrix}$$

where $\sigma_{r,k}^2$, $\sigma_{v_r,k}^2$, and $\sigma_{\theta,k}^2$ are the range, range rate, and bearing measurement noise variances, respectively.

Reference:

Bizup, D.F., and Brown, D.E., 2003, *The Over-Extended Kalman Filter - Don't Use It!*, Proceedings of the IEEE Sixth International Conference of Information Fusion, 2003

11. Polar Measurements with Range Rate and Direction Cosines

Measurements are target range, range rate, and bearing direction cosines, where bearing is referenced clockwise from north

$$\mathbf{z} = \begin{bmatrix} r \\ \dot{r} \\ \cos\theta \\ \sin\theta \end{bmatrix}$$

The measurements are obtained with random measurement errors

$$\begin{bmatrix} r_k \\ v_{r,k} \\ \Lambda_{n,k} \\ \Lambda_{e,k} \end{bmatrix} = \begin{bmatrix} r_k \\ v_{r,k} \\ \cos\theta_k \\ \sin\theta_k \end{bmatrix} = \begin{bmatrix} \sqrt{n_k^2 + e_k^2} \\ \dfrac{n_k v_{n,k} + e_k v_{e,k}}{\sqrt{n_k^2 + e_k^2}} \\ \dfrac{n_k}{\sqrt{n_k^2 + e_k^2}} \\ \dfrac{e_k}{\sqrt{n_k^2 + e_k^2}} \end{bmatrix} + \begin{bmatrix} \nu_{r,k} \\ \nu_{\dot{r},k} \\ \nu_{\Lambda n,k} \\ \nu_{\Lambda e,k} \end{bmatrix}$$

The $\mathbf{H}_k$ matrix is the linearization

$$\mathbf{H}_k = \begin{bmatrix} \frac{\partial r}{\partial n} & \frac{\partial r}{\partial v_n} & \frac{\partial r}{\partial e} & \frac{\partial r}{\partial v_e} \\ \frac{\partial v_r}{\partial n} & \frac{\partial v_r}{\partial v_n} & \frac{\partial v_r}{\partial e} & \frac{\partial v_r}{\partial v_e} \\ \frac{\partial \Lambda_n}{\partial n} & \frac{\partial \Lambda_n}{\partial v_n} & \frac{\partial \Lambda_n}{\partial e} & \frac{\partial \Lambda_n}{\partial v_e} \\ \frac{\partial \Lambda_e}{\partial n} & \frac{\partial \Lambda_e}{\partial v_n} & \frac{\partial \Lambda_e}{\partial e} & \frac{\partial \Lambda_e}{\partial v_e} \end{bmatrix}_{\mathbf{x}=\hat{\mathbf{x}}_{k|k-1}}$$

$$= \begin{bmatrix} \frac{n}{\sqrt{n^2+e^2}} & 0 & \frac{e}{\sqrt{n^2+e^2}} & 0 \\ 0 & \frac{n}{\sqrt{n^2+e^2}} & 0 & \frac{e}{\sqrt{n^2+e^2}} \\ \frac{e^2}{\left(\sqrt{n^2+e^2}\right)^3} & 0 & -\frac{ne}{\left(\sqrt{n^2+e^2}\right)^3} & 0 \\ -\frac{ne}{\left(\sqrt{n^2+e^2}\right)^3} & 0 & \frac{n^2}{\left(\sqrt{n^2+e^2}\right)^3} & 0 \end{bmatrix}_{\mathbf{x}=\hat{\mathbf{x}}_{k|k-1}}$$

The measurement noise covariance, $\mathbf{R}_k$, is

$$\mathbf{R}_k = \begin{bmatrix} \sigma_{r,k}^2 & 0 & 0 & 0 \\ 0 & \sigma_{v_r,k}^2 & 0 & 0 \\ 0 & 0 & \sigma_{\Lambda n,k}^2 & 0 \\ 0 & 0 & 0 & \sigma_{\Lambda e,k}^2 \end{bmatrix}$$

where $\sigma_{r,k}^2$, $\sigma_{v_r,k}^2$, $\sigma_{\Lambda n,k}^2$, and $\sigma_{\Lambda e,k}^2$ are the range, range rate, and the north and east direction cosine measurement noise variances, respectively.

12. Target Maneuvering Index

The system model for linear state evolution and linear measurement is

$$\begin{aligned}\mathbf{x}_{k+1} &= \mathbf{\Phi}_{k+1|k}\mathbf{x}_k + \mathbf{w}_k \\ \mathbf{z}_k &= \mathbf{H}_k\mathbf{x}_k + \mathbf{v}_k\end{aligned}$$

The system model for linear state evolution and nonlinear measurement is

$$\begin{aligned}\mathbf{x}_{k+1} &= \mathbf{\Phi}_{k+1|k}\mathbf{x}_k + \mathbf{w}_k \\ \mathbf{z}_k &= \mathbf{h}(\mathbf{x}_k) + \mathbf{v}_k\end{aligned}$$

The system model for nonlinear state evolution and nonlinear measurement is

$$\begin{aligned}\mathbf{x}_{k+1} &= \mathbf{f}(\mathbf{x}_k) + \mathbf{w}_k \\ \mathbf{z}_k &= \mathbf{h}(\mathbf{x}_k) + \mathbf{v}_k\end{aligned}$$

For all models, both $\mathbf{w}_k$ and $\mathbf{v}_k$ are white noise sequences

$$\begin{aligned}\mathbf{w}_k &\sim \mathcal{N}(\mathbf{0}, \mathbf{Q}_k)\ , \quad \mathbf{Q}_k = E[\mathbf{w}_k\mathbf{w}_k^T] \\ \mathbf{v}_k &\sim \mathcal{N}(\mathbf{0}, \mathbf{R}_k)\ , \quad \mathbf{R}_k = E[\mathbf{v}_k\mathbf{v}_k^T]\end{aligned}$$

The **target maneuvering index** is a quantity defined as the ratio of RMS motion uncertainty, σ_w, over one sampling period to RMS measurement uncertainty, σ_v:

$$\lambda \triangleq \frac{\sigma_w T^2}{\sigma_v}$$

The motion uncertainty, σ_w, is the state evolution process noise standard deviation, the measurement uncertainty, σ_v, is the measurement noise standard deviation, and the time, T, is the tracker update time step.